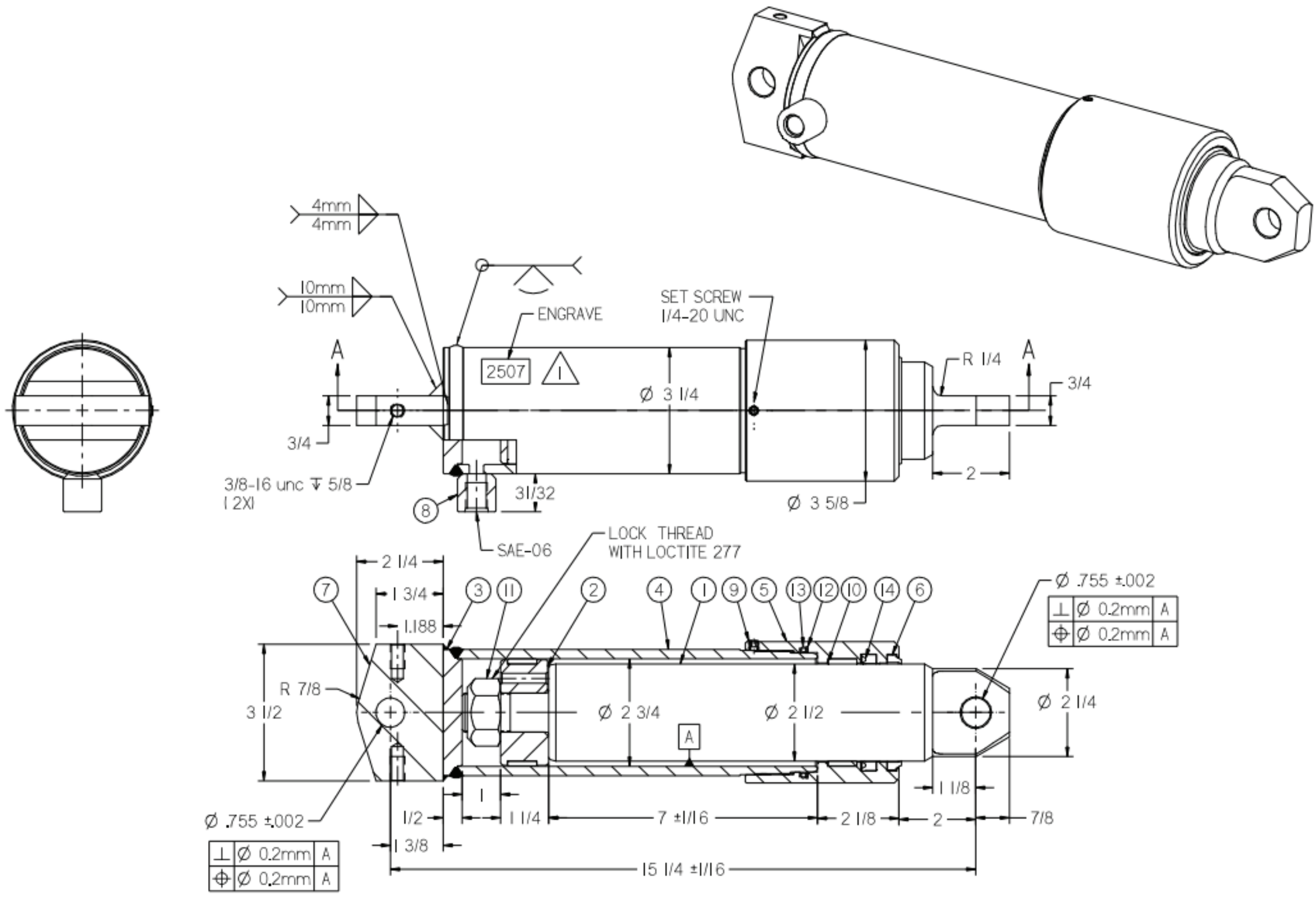Item Number: 906852