SURPLUS CENTER
800-488-3407
www.surpluscenter.com
1015 West "O" St.
LINCOLN, NE 68528

13-1423-KC

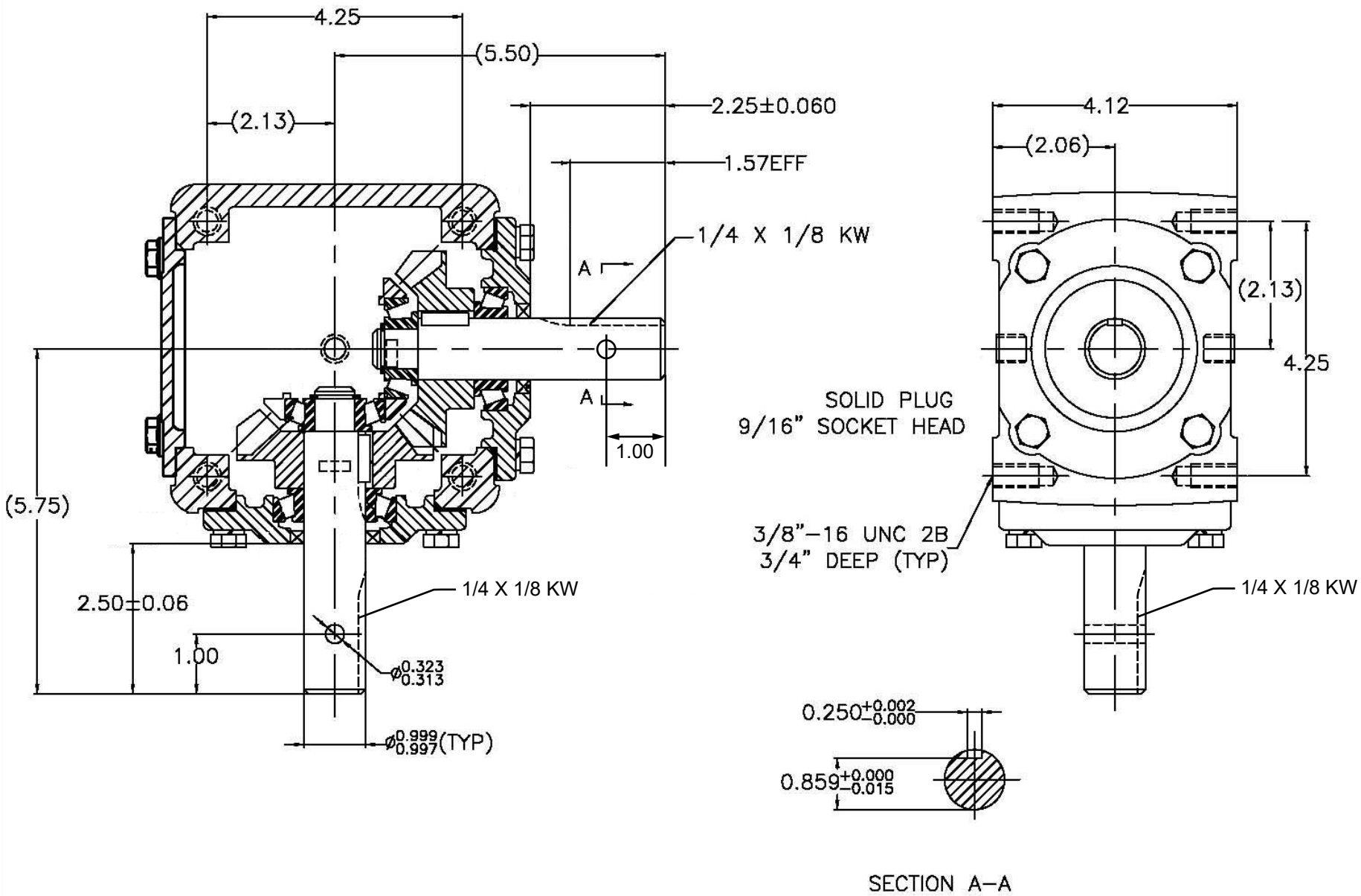

Rev090920