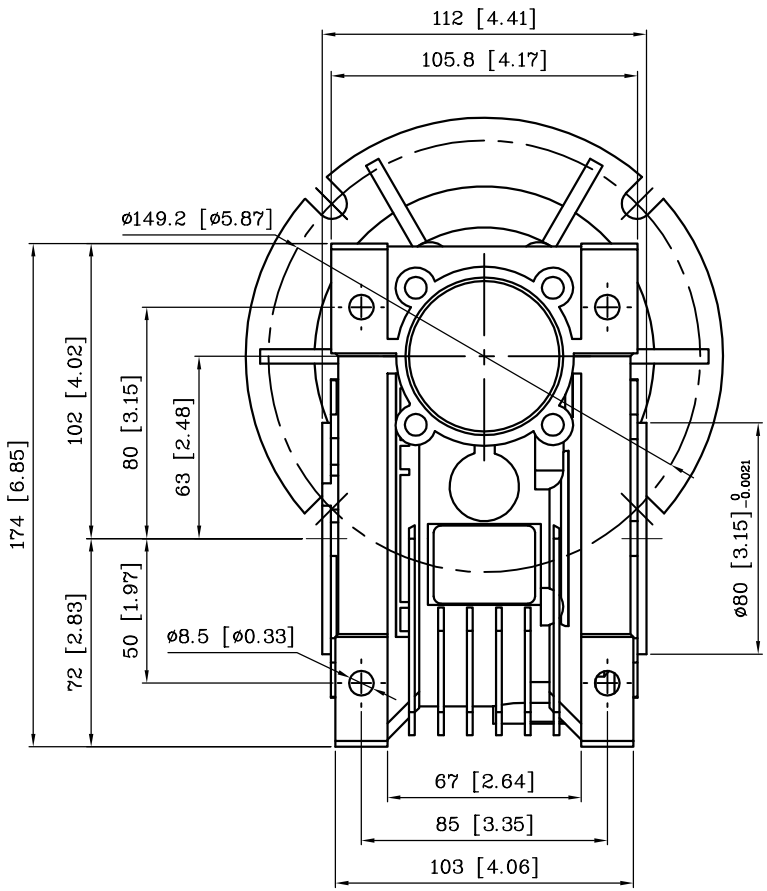

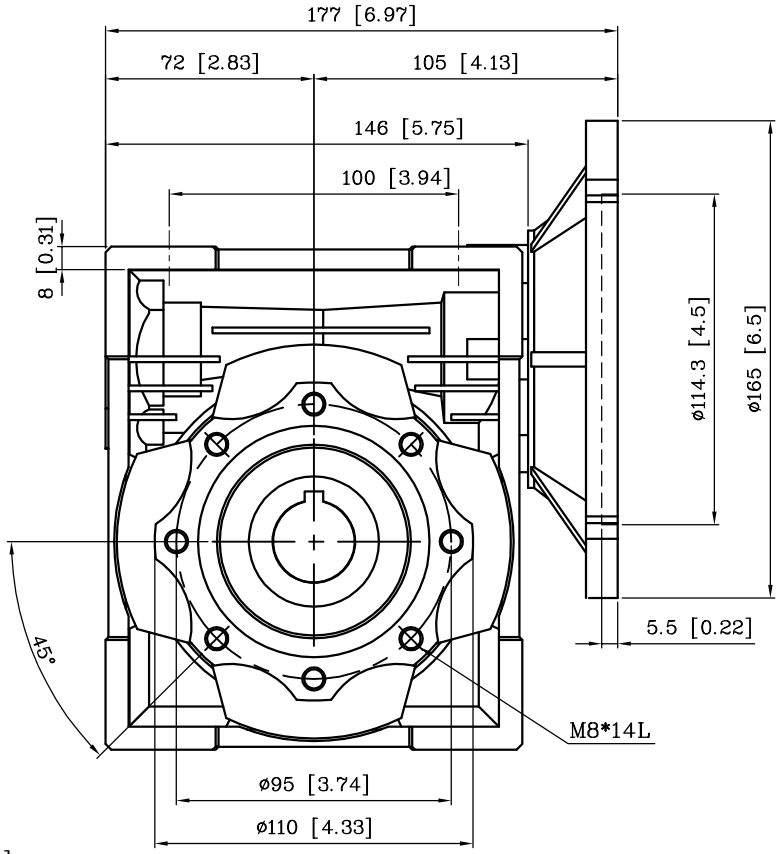

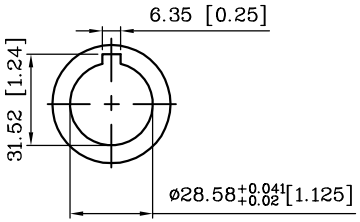

OUTPUT BORE

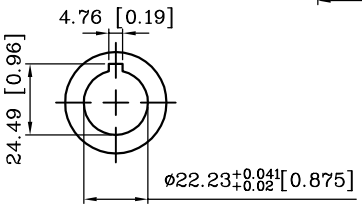

INPUT BORE

SCABBLE TOL.		DWG.	2022.06.02	Y.S.P	WORLDWIDE
>0	±0.1	DESN.			
>6	±0.2	APPR.			
>30	±0.3				
>120	±0.5				
>315	±0.8		DATE	NAME	TITLE: CALM63-143TC
MACHINING REQUIRED					
NO MACHINING					
50S					
25S					
6S		SCALE	1:1		DWG NO.: CALM63-143TC REV: A
ANG.	±0.5				

NO.	SECTION	ORIGIN	MODIFICATION	DATE	IN CHARGE
2					
1					