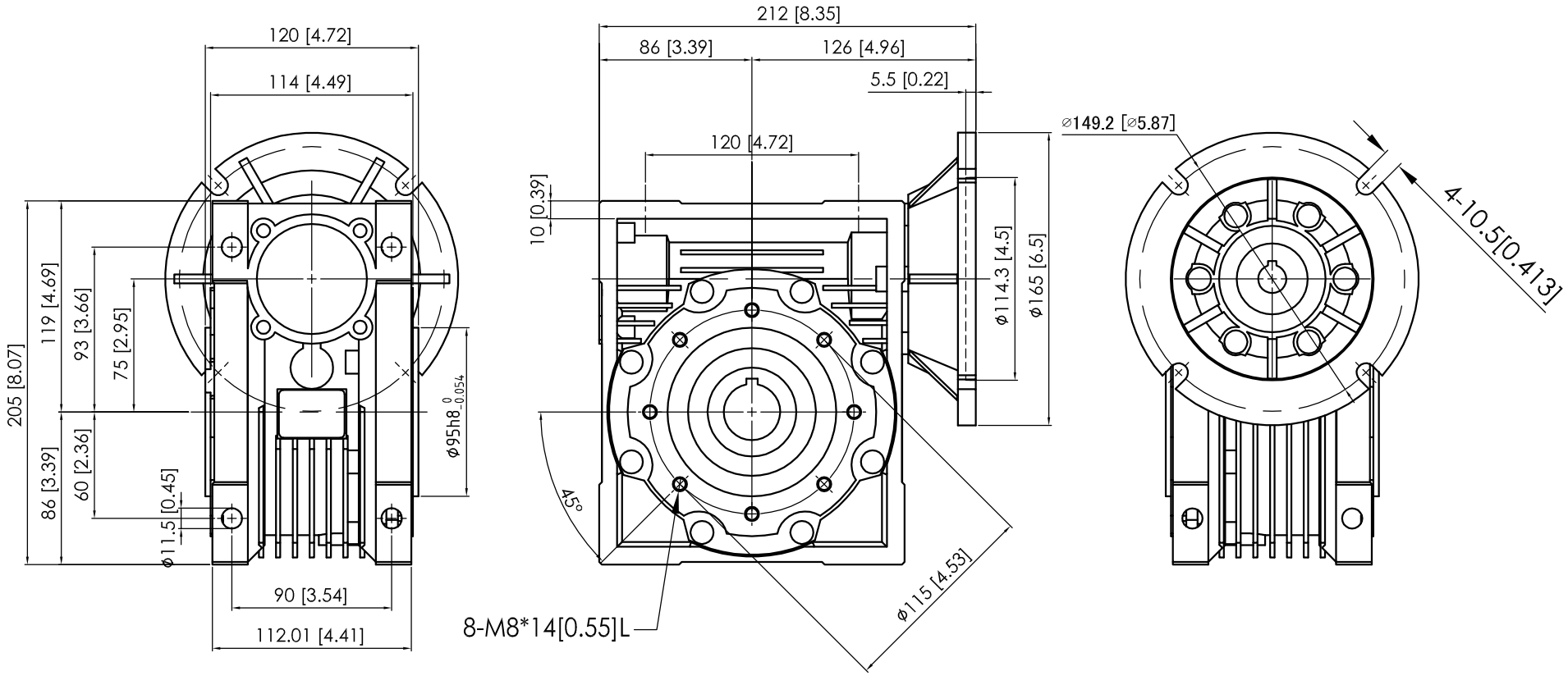

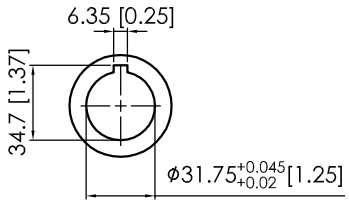

OUTPUT BORE

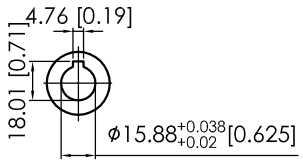

INPUT BORE

SCABBLE TOL.		DWG.	2022.06.02	Y.S.P	WORLDWIDE
>0	±0.1				
>6	±0.2	DESN.			
>30	±0.3	APPR.			
>120	±0.5				
>315	±0.8				
MACHINING REQUIRED			DATE	NAME	TITLE CALM75-56C
NO MACHINING					
▽	50S				
▽▽	25S				
▽▽▽	6S	SCALE	1:1		DWG NO. CALM75-56C REV A
ANG.	±0.5				

NO.	SECTION	ORIGIN	MODIFICATION	DATE	IN CHARGE
2					
1					