SURPLUS CENTER
800-488-3407
www.surpluscenter.com
1015 West "O" St.
LINCOLN, NE 68528

13-1621

GEAR	ANGLE OF THROW FROM NEUTRAL	RATIO
		68.559:1
FIRST	10° 30'	60.249:1
SECOND	18° 30'	47.464:1
		34.279:1
THIRD	26° 30'	30.918:1
		27.931:1
		22.853:1
FOURTH	34° 30'	20.676:1
FIFTH	43°	15.235:1
SIXTH	52° 15'	13.711:1
REVERSE	11° 30'	47.464:1

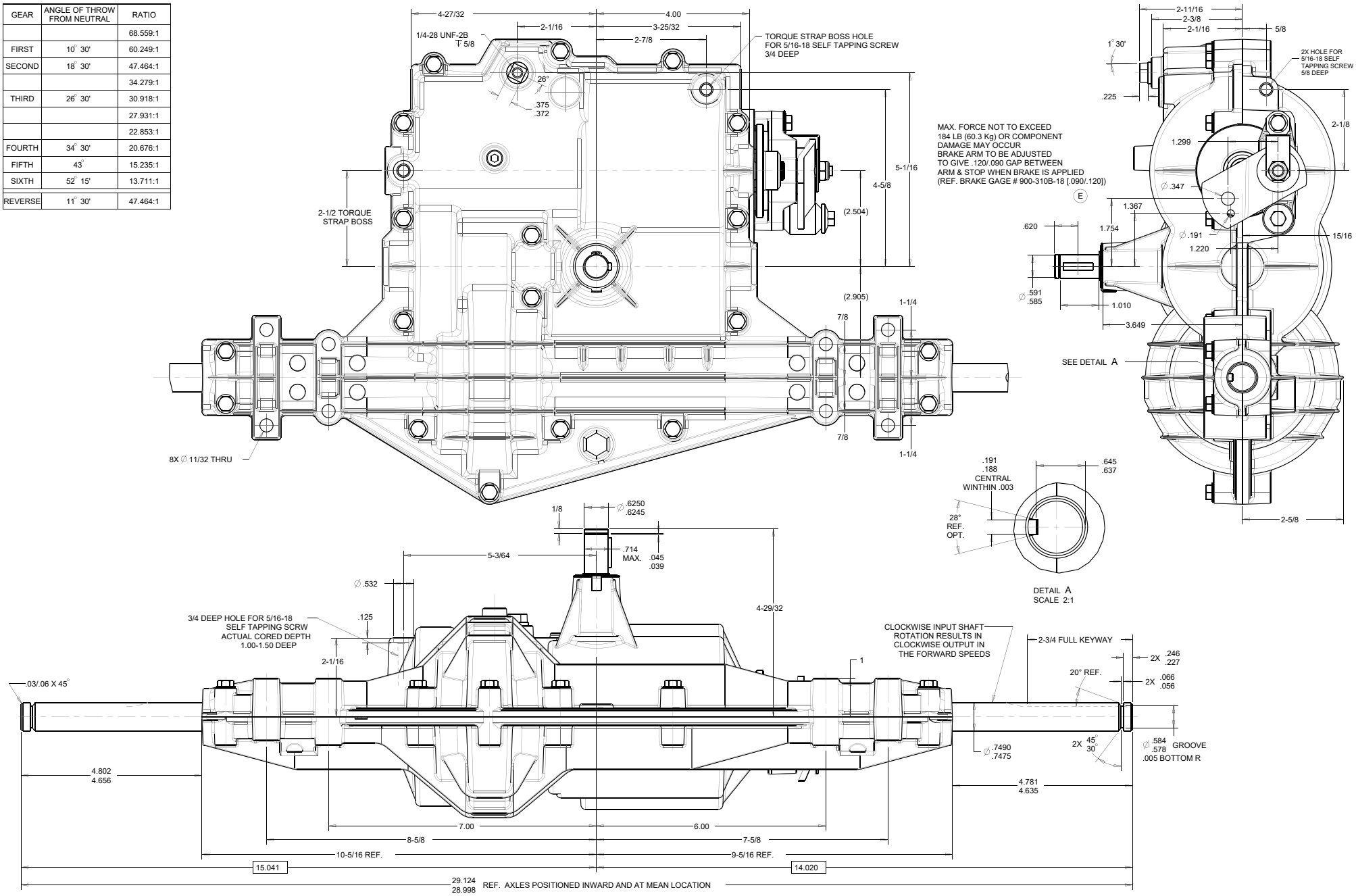

Rev030921