Item Number: 9-16701-S-6 (Pump)
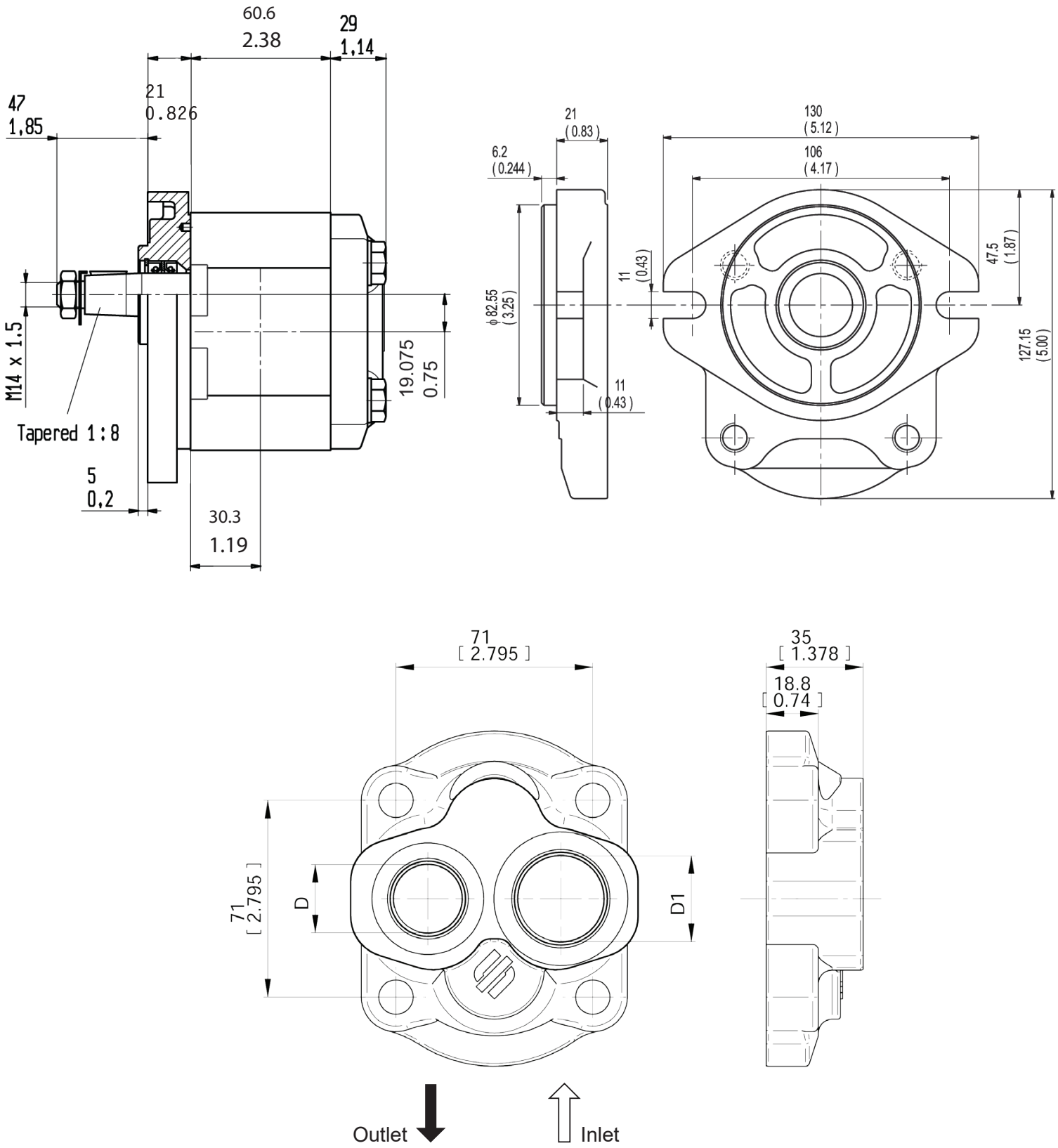
2.5PB-13.8