Item Number: 9-16703-S-6 (Pump)
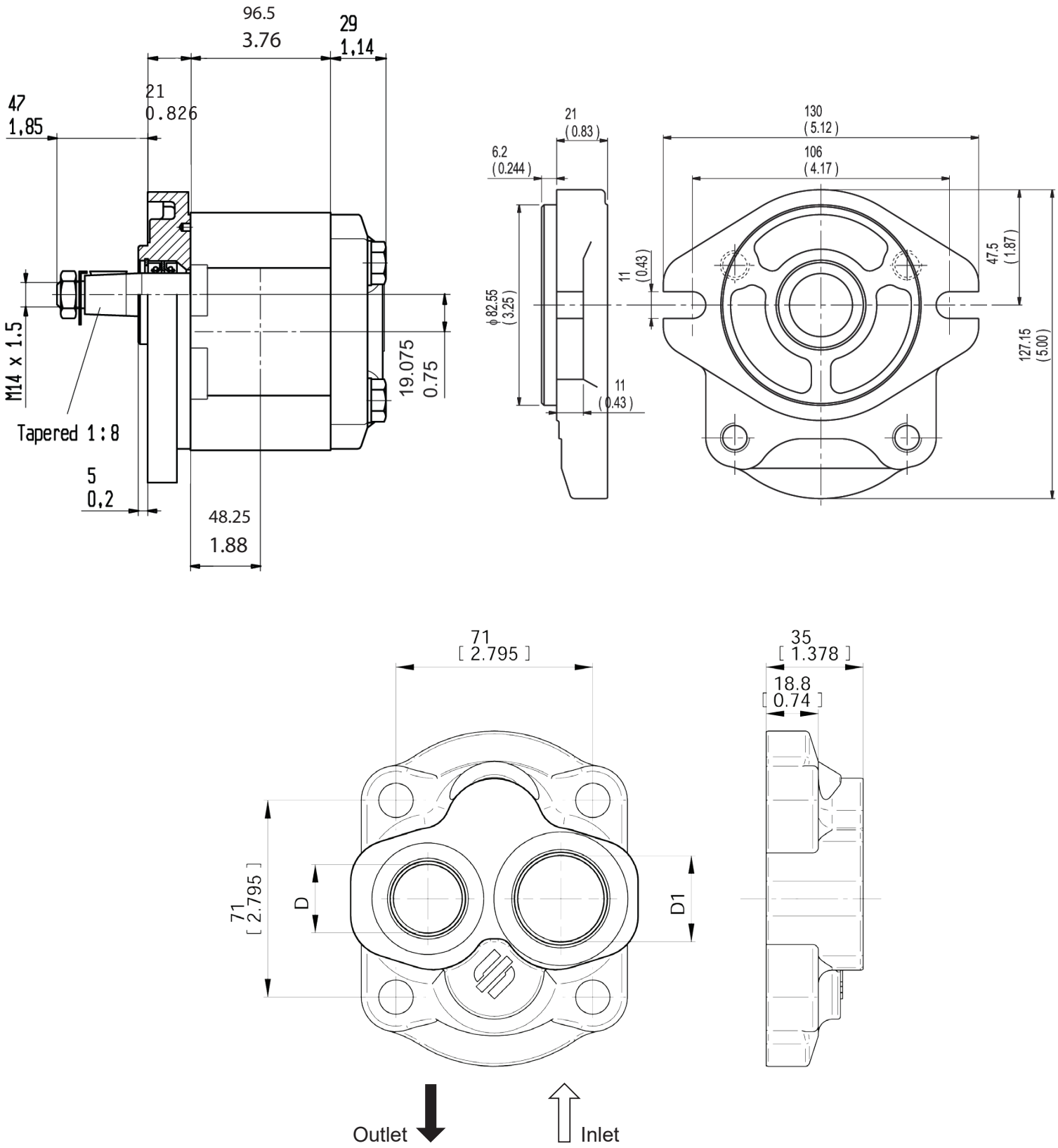
2.5PB-38