SURPLUS CENTER
800-488-3407
www.surpluscenter.com
1015 West "O" St.
LINCOLN, NE 68528
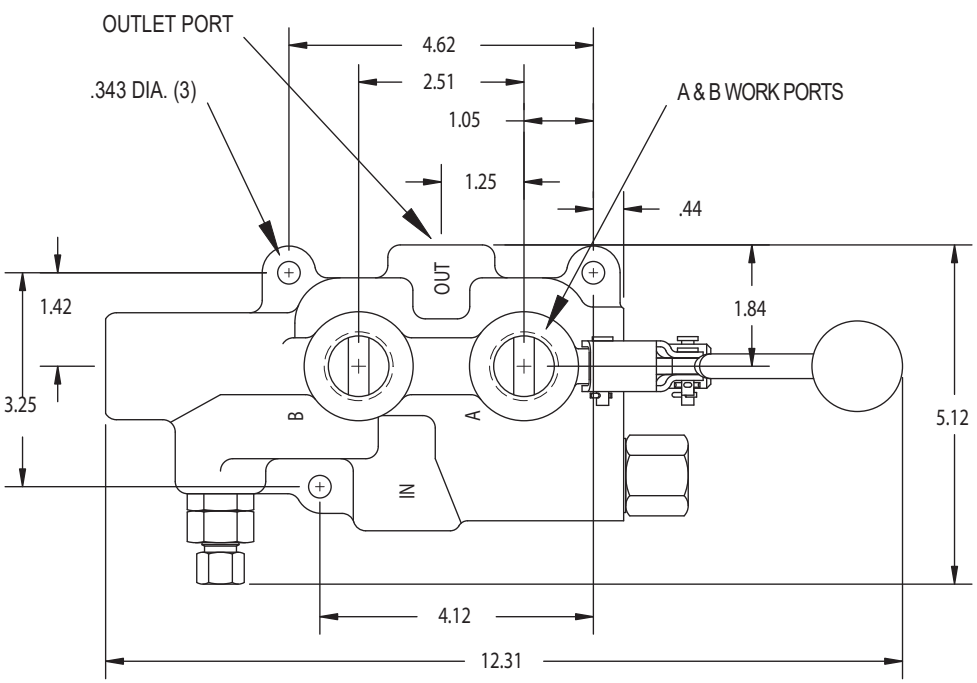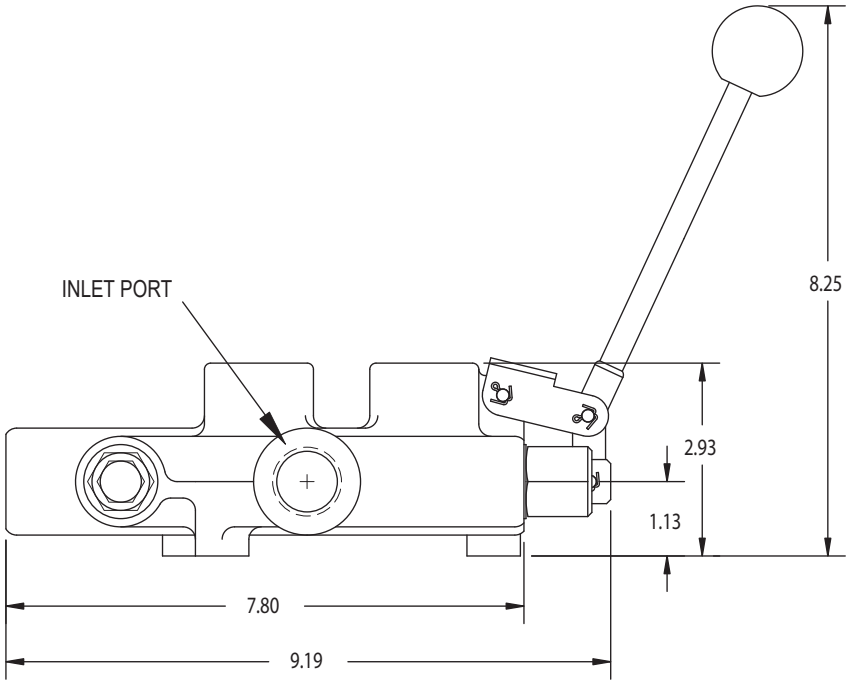
9-6763