SURPLUS CENTER
800-488-3407
www.surpluscenter.com
1015 West "O" St.
LINCOLN, NE 68528

World Wide Electric
Inline Gear Reducers
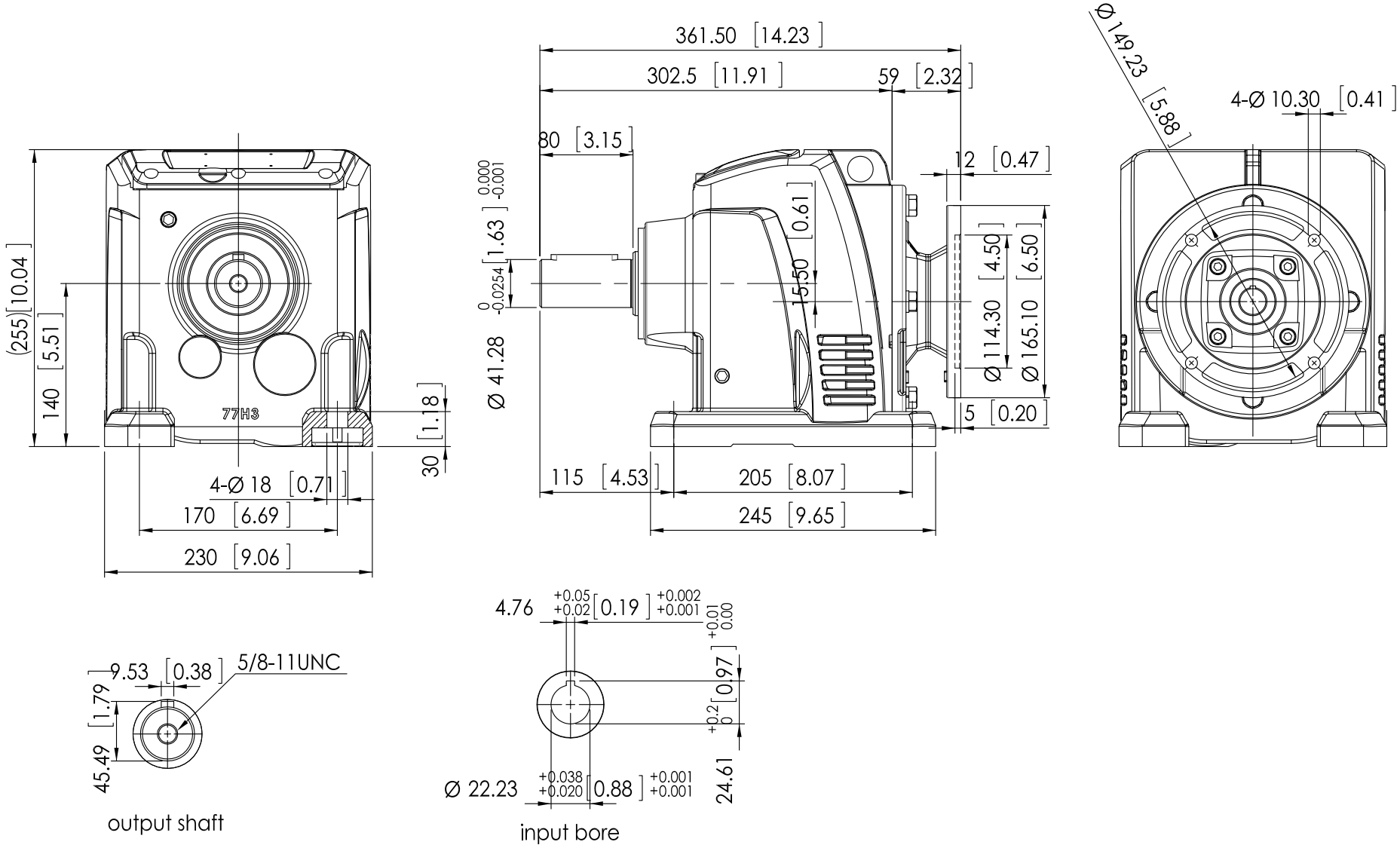
13-1555-xx-145TC
WINL77-145TC